Classified by
Underwriters Laboratories, Inc.
to ASTM E2307

System No. CW-D-1001

F Rating — 2 Hr
T Rating — 1/4 Hr
Linear Opening Width - 6 In. Max
Class II Movement Capabilities - 5% Vertical Shear (See Item 3)

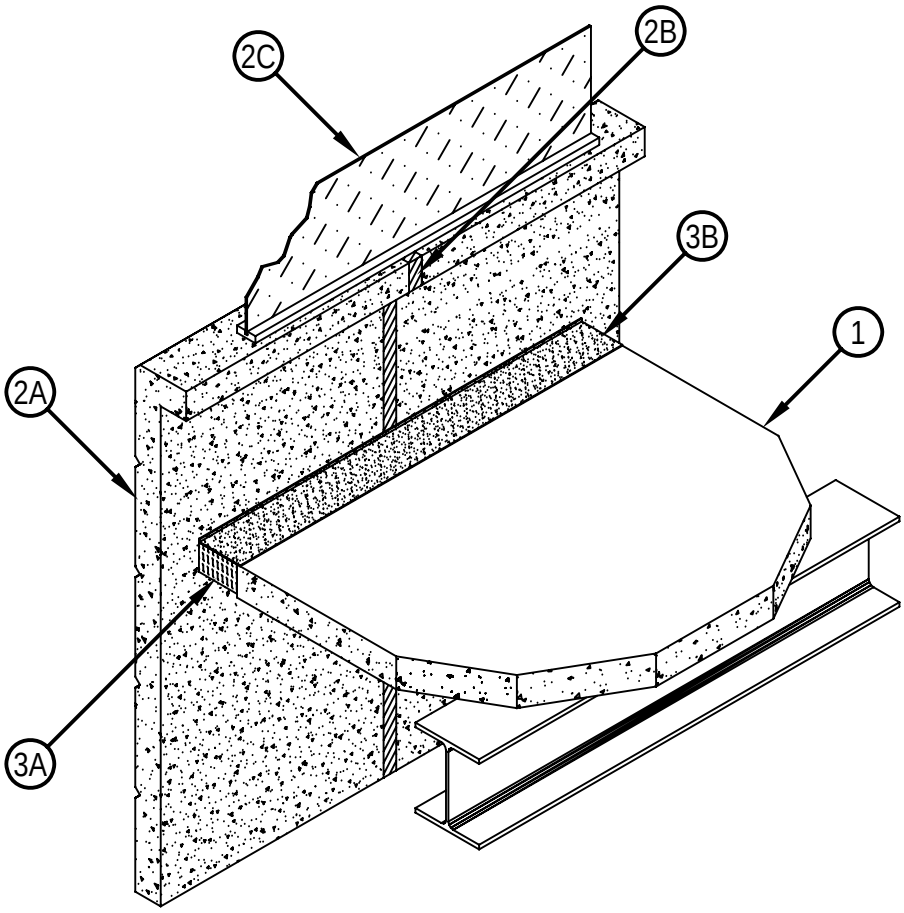

1. Floor Assembly — Min 4-1/2 in. (114 mm) thick steel-reinforced lightweight or normal weight (100-150 pcf or 1600-2400 kg/m3) structural concrete. Floor assembly to be supported at perimeter edges by spandrel beams having a Restrained or Unrestrained Beam Rating of 2 hr.
2. Curtain Wall Assembly — The curtain wall assembly shall incorporate the following construction features:
   A. Spandrel Panels — Min 36 in. (914 mm) high by min 4 in. (102 mm) thick steel-reinforced lightweight or normal weight (100-150 pcf or 1600-2400 kg/m3) structural concrete spandrel panels. Wall may also consist of min 4 in. (102 mm) thick steel-reinforced lightweight or normal weight concrete tilt-up panels with a min 36 in. (914 mm) vertical separation between window openings. Panels provided with steel dead load anchors welded to steel reinforcing bars embedded in the concrete for attachment to the steel columns and spandrel beams. Panels also provided with steel lateral anchors or braces. The dead load anchors which are located in the linear gap between the concrete floor slab and the spandrel panel or tilt-up panel are to be spaced max 72 in. (1829 mm) OC. The top of the dead load anchor is to be recessed min 1/2 in. (13 mm) from top surface of floor
   B. Joint System — (Not Shown) - Vertical joints between spandrel panels or tilt-up panels to be protected using Joint System No. WW-S-0042
   C. Framed Window — Metal framed window with nom 1/4 in. (6 mm) thick heat-strengthened glass. Sill of window to be min 6 in. (152 mm) above top of floor.

Classified by
Underwriters Laboratories, Inc.
to ASTM E2307

System No. CW-D-1001

F Rating — 2 Hr
T Rating — 1/4 Hr
Linear Opening Width - 6 In. Max
Class II Movement Capabilities - 5% Vertical Shear (See Item 3)

3. Safing System — Max separation between edge of floor assembly and concrete spandrel or tilt-up panel is 6 in. (152 mm). The safing system is designed to accommodate vertical shear movement of up to 5 percent of its installed width. The safing system shall incorporate the following construction features:
   A. Forming Material* — Nom 4 in. (102 mm) thick mineral wool batt safing material to be installed between the concrete spandrel or tilt-up panel and the edge of the concrete floor slab. Safing material to be cut to a min 4-1/2 in. (114 mm) width and stacked to a thickness which is at least 25 percent greater than the width of the linear gap between the concrete spandrel or tilt-up panel and the edge of the concrete floor slab. The safing material is compressed and inserted cut-edge-first into the linear gap such that its top surface is flush with the top surface of the floor assembly. A max of one tightly-butted seam is permitted between dead load anchors. An additional min 1/2 in. (13 mm) thick piece of mineral wool batt safing material to be installed to cover top surface of each dead load anchor.
   THERMAFIBER INC — SAF
   B. Fill, Void or Cavity Material* — Min 1/8 in. (3.2 mm) wet thickness (1/16 in. or 1.6 mm dry) of fill material spray-applied over top of forming material and lapping min 1 in. (25 mm) onto the top surface of the concrete floor and onto the concrete spandrel panel or tilt-up panel.
   HILTI CONSTRUCTION CHEMICALS, DIV OF HILTI INC — CP 672 Firestop Joint Spray, CP 672 FC Firestop Joint Spray or CFS-SP WB Firestop Joint Spray

*Bearing the UL Classification Mark