System No. CEJ 265 P (HI/PHV 120-11)

PERIMETER FIRE BARRIER SYSTEM - ASTM E 2307

	CP 672 SPEED SPRAY	CP 672 FAST CURE	CFS-SP WB
F-RATING	2-HR.	2-HR.	2-HR.
T-RATING	1-HR.	3/4-HR.	1-HR.

L-RATING < 1 SCFM/LF

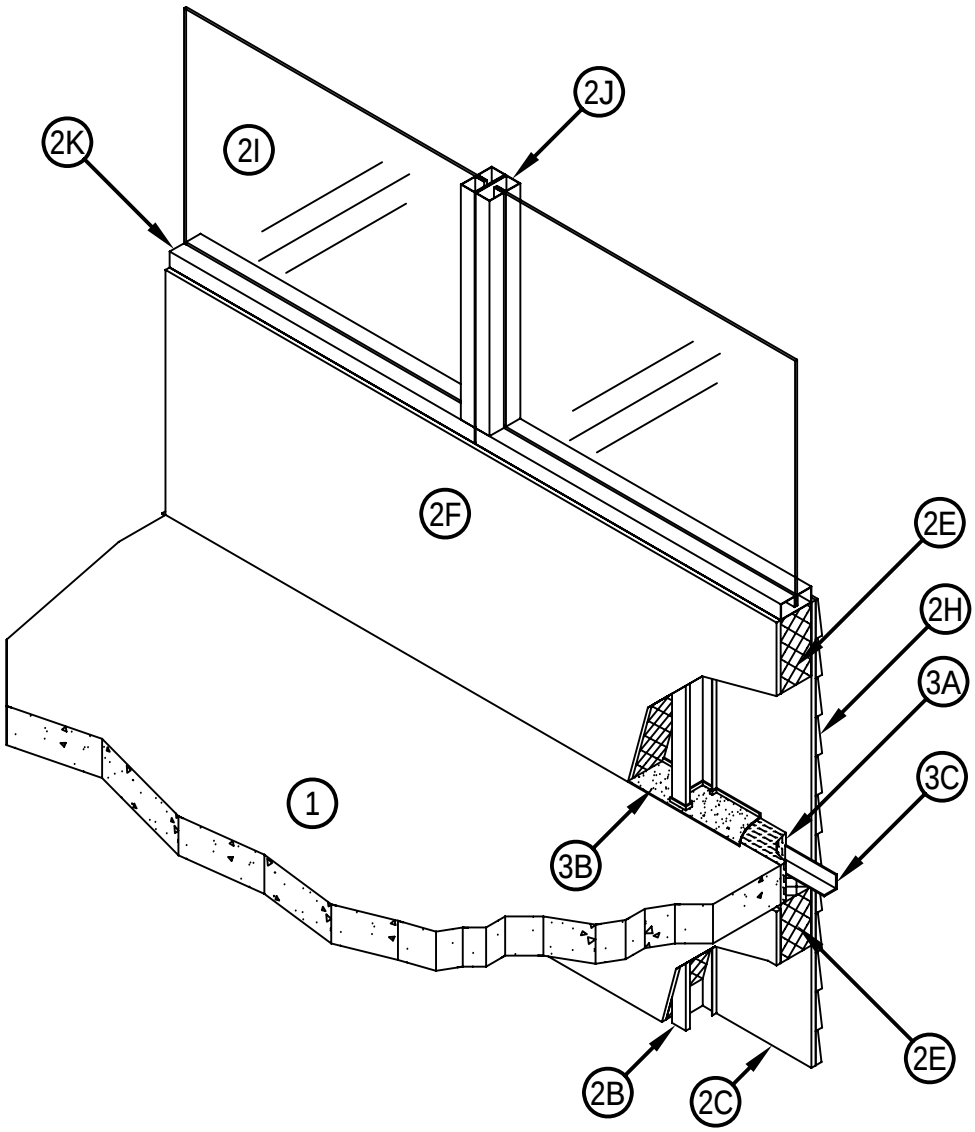

System No. CEJ 265 P (HI/PHV 120-11)

PERIMETER FIRE BARRIER SYSTEM - ASTM E 2307

	CP 672 SPEED SPRAY	CP 672 FAST CURE	CFS-SP WB
F-RATING	2-HR.	2-HR.	2-HR.
T-RATING	1-HR.	3/4-HR.	1-HR.

L-RATING < 1 SCFM/LF

1. CONCRETE FLOOR ASSEMBLY: Two-hour rated concrete floor assembly made from either lightweight or normal weight concrete with a density of 100-150 pcf, with a min. thickness of 4- in. at the slab edge. Overall slab thickness may vary to accommodate various blockout depths (longitudinal recesses) formed in the concrete, to house the architectural cover plate. The blockout width may also vary without restriction.
2. CURTAIN WALL ASSEMBLY: The curtain wall assembly shall incorporate the following construction features:
   - A. Mounting Attachment: (Not shown) Attachment of the curtain wall framing to the structural framing shall be according to the curtain wall manufacturer's instructions. When required, the mounting attachments to the floor slab shall be connected to the adjacent face of the floor slab, according to the curtain wall manufacturer's instructions. Max. distance between mounting attachments shall be 10 feet.
   - B. Steel-Stud Framing: Vertical framing members shall be a min. 3-5/8 in. by 1-5/8 in., 18 GA steel "C" studs secured in an 18 GA steel track top and bottom using #6 x 1.25-inch Bugle head SD PT screws. Vertical framing shall not exceed a spacing of 24 in. o.c.
   - C. Sandwiched Wall Surface: Use a min. 1/2 in. thick, 48 in. wide by 96 in. long, exterior grade gypsum wallboard (ASTM C 79), cement board, or fiberglass sheathed gypsum wallboard placed over and secured to framing with min. 1-1/4 in. long Type S drywall screws 8 in. o.c.
   - D. Curtain Wall Insulation: (Optional – Not Shown) A faced or un-faced mineral wool or fiberglass** batt insulation installed in each stud cavity in accordance with manufacturer's instructions. (** Listed with Intertek)
   - E. Barrier Insulation: Use a nom. 24-in wide by 4 in. thick min. 4 pcf faced or un-faced mineral wool** batt insulation cut to size as required. Install barrier insulation in each stud cavity so that min. 32-inches of barrier insulation is above the top surface of the slab and a min. of 24-in. is below the bottom surface of the slab. Barrier insulation length is min. 24-in. and fitted tightly between vertical framing members filling all studs. Seal all butt joints of barrier insulation with min. 4-in. wide aluminum foil faced tape. The curtain wall insulation shall completely fill the recess of the min. 3-5/8 in. by 1-5/8 in., 18 GA steel "C" studs. (** Listed with Intertek)
   - F. Interior Curtain Wall Surface: Apply after Perimeter Void Space Protection (3) is installed. Use a min. 1/2 in. thick, 48 in. wide by 96 in. long, Type X gypsum wallboard (ASTM C 36), placed over and secured to framing with #6 by 1-1/4-in. long Type S drywall screws 8 in. o.c. on the periphery and 12 in. o.c. in the field. Screw heads are covered with joint compound. Joints created between gypsum wallboard are taped and floated with joint compound. Gypsum wallboard only required to be continuously placed a min. 32 in. above surface of the slab. Gypsum wallboard below the slab is optional.
   - G. Exterior Curtain Wall Insulation: (Optional -Not Shown) An expanded polystyrene foam (EPS) insulation. The EPS foam boards measure 24 inches wide by 48 inches long by 4 inches thick with a nominal density of 1 pcf. The EPS foam is attached to the sandwiched wall surface using mechanical fasteners or an adhesive in accordance with manufacturer's recommendations. Install the EPS boards in a running bond (brick-like) pattern and staggered over sandwiched wall surface (2C) joints. Apply pressure to the EPS boards to assist in the bonding process. All EPS boards must be butted together with no gaps or voids between them. Allow a minimum of 12 hours before continuing the application process when using adhesive. The EPS boards must be rasped to remove all irregular seams and establish a continuous flat surface.
   - H. Exterior Curtain Wall Finish: Use cementitious, aluminum or steel siding of any type. Install per manufacturer's instructions. Secure siding to wall assembly using conventional acceptable fastening techniques.
   - I. Glass Vision Panels: Glass vision panels shall be a min. 35-1/2 in. above the top surface of the floor assembly. Glass vision panels shall be installed to curtain wall framing according to the curtain wall system manufacturer's guidelines. Use a min. 1/4 in. thick, clear tempered glass with a nom. width of 59 in. and height of 71 in.
   - J. Window Gaskets: Secure glass vision panels with a thermal break (thermal-set rubber extrusion).
   - K. Window Framing: Steel framing members shall be a min. 3-5/8-in. by 1-5/8-in. 18 GA steel "U" channel or similar construction that is compatible with steel-stud framing (2b). Locate window framing at least 35 in. above the top surface of the floor assembly.

System No. CEJ 265 P (HI/PHV 120-11)

PERIMETER FIRE BARRIER SYSTEM - ASTM E 2307

	CP 672 SPEED SPRAY	CP 672 FAST CURE	CFS-SP WB
F-RATING	2-HR.	2-HR.	2-HR.
T-RATING	1-HR.	3/4-HR.	1-HR.

L-RATING < 1 SCFM/LF

3. PERIMETER VOID SPACE PROTECTION: The perimeter void space (any wall cavity void between the edge of the floor and the interior surface of the sandwiched wall (2C) shall not exceed an 8- in. nom. dimension and the perimeter void space treatment shall incorporate the following construction features:
   A. Packing Material: Use a min. 4 in. thick, 4 pcf density, mineral wool** batt insulation installed with the fibers running parallel to the slab edge and curtain wall. The packing material shall be compressed 33% in the nominal joint void space. Compress the batt insulation into the perimeter void space such that the top surface of the batt insulation is flush with the top surface of the concrete floor slab. Splices (butt joints) in the lengths of mineral wool batt insulation are to be tightly compressed together, min. compression 0.25-in. per piece. Notch packing material to receive support angle (3C) so that packing material is in contact with Sandwiched Wall Surface (2C). Reference the Introduction to Fire Resistive Joint Systems Section of this Directory for more details on how to determine the compressed percentage of a known insulation width installed in a known nominal void space width. (** Listed with Intertek)
   B. CERTIFIED MANUFACTURER: Hilti, Inc.
   CERTIFIED PRODUCT: Joint Spray or Sealant
   MODEL: CP 672 Speed Spray or CP 672 Fast Cure or CFS-SP WB Firestop Joint Spray
   Fill, Void or Cavity Material: To be applied (sprayed, Brushed, or painted) to cover the entire horizontal top surface of the mineral wool installed in the perimeter void space. Apply a min. 1/8-in. wet (min. 1/16-in. dry) film thickness and overlap the material a min. 1/2 in. onto the Sandwiched Wall Surface (2C) and Concrete Floor Assembly (1). If the spraying process is stopped and the applied liquid cures to an elastomeric film before process is restarted, then overlap the edge of the cured material at least 1/8 in. with the spray. Reference Product Section of this Directory for more details about the Listed product.
   C. Support Angle: Standard 1-1/2 x 1-1/2-in. min. 20 GA galvanized steel angle attached between all studs with self tapping self drilling screws. Set angle at mid height of Packing Material (3A).