FS 657
Fire Block

Product description
- Ready-to-use, intumescent flexible block designed to seal medium to large size openings

Product features
- Suitable for re-penetration or new penetrations
- Economical to use with short installation times
- Easy installation — no special tools required
- Ideal for use in floors — no forming required
- One sided wall systems available
- Halogen, asbestos and solvent free
- Operational immediately after installation
- Paintable
- Smoke resistant

Areas of application
- Sealing single or multiple penetrations in small to large openings
- Temporary or permanent sealing of cables and cable tray penetrations
- Temporary or permanent sealing of insulated and non-insulated metallic pipes and combustible pipe penetrations

For use with
- Walls (UL tested up to max. opening 52" x 48")
- Floors (UL tested up to max. opening 36" x 36")
- Concrete, porous concrete, masonry and gypsum wall assemblies
- Wall assemblies rated up to 4 hours
- Floor assemblies rated up to 3 hours

Examples
- Completely dust and fiber free rooms and places where electrical installations are frequently used (ie: computer centers, hospitals, laboratories, etc.)
- New buildings in the construction phase and during renovation
- Large openings containing multiple penetrations as found in production bays, warehouses, hospitals etc.

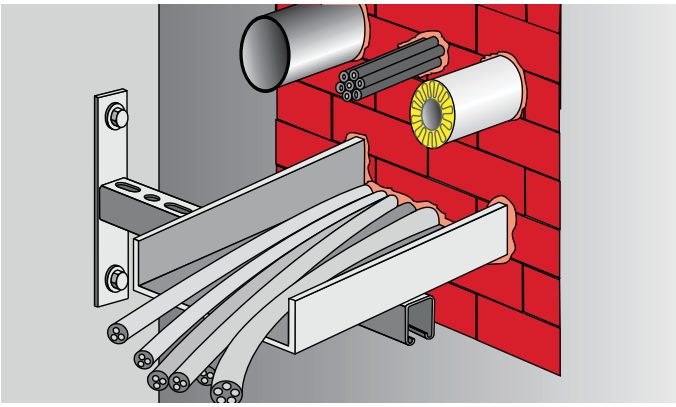

Technical Data*	FS 657
Color	Red
Application temperature	40° F to 104° F (5° C to 40° C)
Temperature resistance	5° F to 140° F (-15° C to 60° C)
Intumescent activation	Approx. 572° F (300°C)
Expansion ratio (unrestricted)	Up to 1:3
Surface burning characteristics (ASTM E 84-96)	Flame Spread Index: 0 Smoke Development Index: 25
Sound transmission classification (ASTM E 90-99)	54 (Relates to specific construction)
Tested in accordance with • UL 1479 • ASTM E 814 • ASTM E 84 • CAN/ULC-S115	

*At 73°F (23°C) and 50% relative humidity

CLASSIFIED c UL us
FILL, VOID OR CAVITY MATERIAL
FOR USE IN THROUGH-PENETRATION
FIRESTOP SYSTEMS
SEE UL FIRE RESISTANCE DIRECTORY
66Y7

FM APPROVED

Installation instructions for FS 657

Notice
- Before handling, read Material Safety Data Sheet and product label for safe usage and health information.
- Instructions below are general guidelines — always refer to the applicable drawing in the UL Fire Resistance Directory or Hilti Firestop Systems Guide for complete installation information

Opening
1. Clean the opening. Penetration and penetration supporting structures must be installed in compliance with local building and electrical standards.

Application of Fire Blocks
2a. If no penetrations are located, build up FS 657 Fire Block firmly seated, within opening.

2b. If penetrations are located, build up FS 657 Fire Block firmly seated, while cutting blocks with a knife to suit the placed penetrations.

3. Finish building up Fire Blocks until entire opening is filled.
4. Completely fill cable spaces, gaps between blocks and pipes, and joints with FS-ONE Firestop Sealant.
5. For maintenance reasons, a penetration seal could be permanently marked with an identification plate. In such a case, mark the identification plate and fasten it in a visible position next to the seal.

Re-installing cables or other penetrations
- Remove or cut the block from the seal.
- Install the penetrant and re-lay the block in compliance with the approval. Fill gaps and spaces with FS-ONE.

  Single cables can be run through joints between blocks or a hole can be drilled through a block using a sharpened piece of metal pipe or tubing.

Not for use
- In wet rooms, outdoors or exposed to the weather or UV radiation (can be done only after applying an additional silicone coating, i.e. CP 601S).

Storage
- Store only in the original packaging in a location protected from moisture and direct sunlight

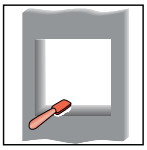
1. Clean opening.

2a. Build up blocks

2b. Cut blocks to size for penetrations in place

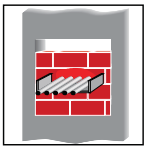
3. Build up blocks

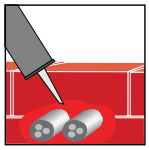
4. Fill gaps with FS-ONE, CP 617 or CP 618 putty.

5. Fasten identification plate in place (If required)

Hilti Firestop
Saving lives through innovation and education

Hilti. Outperform. Outlast.

MSDS No.:	261C
Revision No.:	005
Revision Date:	08/26/09
Page:	1 of 2

Product identifier:	**FS 657 Fire Block; CP 658T Fire Plug**
Product use:	Intumescent polyurethane foam block for fire stopping openings in walls and floors
Supplier:	Hilti (Canada) Corporation, 2360 Meadowpine Blvd., Mississauga, Ontario L5N 6S2
Originator	Hilti, Inc., P. O. Box 21148, Tulsa, Oklahoma, USA 74121
Emergency number:	Chem-Trec: 1 800 424 9300

HAZARDOUS INGREDIENTS

Not a hazardous chemical as defined by the Controlled Products Regulations SOR/88-66; classified as a manufactured “article”.

PHYSICAL PROPERTIES

Appearance / Physical state:	Red (rust) colour. Foam block.	**Odour:**	Not applicable.
Specific gravity (at 20 ° C):	2.6	**VOC content:**	3.9 g/l
Vapour pressure (at 20 ° C):	Not applicable.	**Vapour density:**	Not applicable.
Evaporation rate:	Not applicable.	**Boiling point:**	Not applicable.
Freezing point:	Not applicable.	**pH:**	Not applicable.
Coefficient of H_20 / oil distrib:	Not applicable.	**Solubility in water:**	Not Soluble

FIRE AND EXPLOSION DATA

Flash point / Method	Not applicable.	**Flammable limits:**	Not applicable.
Conditions of flammability:	Not flammable.	**Auto-ignition temperature:**	Not applicable.
Means of extinction:	Not applicable.		
Special fire fighting procedures:	Not applicable.		
Hazardous combustion products:	Refer to "Hazardous decomposition products" (next section).		
Sensitivity to mechanical impact / static discharge:	Not susceptible to mechanical impact or static discharge.		

REACTIVITY DATA

Stability:	Stable. Hazardous polymerization will not occur.
Incompatible materials:	None known. See special handling and storage instructions.
Conditions of reactivity:	None known.
Hazardous decomposition products:	If heated to decomposition, can yield CO_x, NO_x, HCN, HCl and/or HF.

TOXICOLOGICAL PROPERTIES

Likely routes of exposure:	☑ None known ☐ Skin contact ☐ Skin absorption ☐ Eye contact ☐ Inhalation
Exposure limits:	None established.
Acute effects of exposure:	Not applicable.
Chronic effects of exposure:	None known.
Synergistic materials:	None known.

FIRST AID MEASURES

Eyes:	No effects expected.
Skin:	No effects expected. Practice good hygiene; i.e., wash hands during breaks, before eating or smoking, and after work.
Inhalation:	Not a route of exposure.
Ingestion:	Not a likely route of exposure.
Other:	Referral to a physician is recommended if there is any question about the seriousness of the injury/ exposure.

PREVENTIVE MEASURES

Engineering controls:	General (natural or mechanically induced fresh air movements).
Eye protection:	As appropriate for the work area or the work being done.
Skin protection:	Cloth gloves are suitable.
Respiratory protection:	None normally required. Never enter a confined space without an appropriate air supplied respirator.
Other:	Depending on exposure and on workplace standards.
Handling procedures and equipment:	For industrial use only. Keep out of reach of children. Observe good hygiene practices; i.e., wash after using and before eating or smoking.
Storage requirements:	Store in a cool dry area out of direct sunlight.
Spill, leak or release:	No special requirements.
Waste disposal:	Consult federal, provincial and local regulations for allowed means of disposal.
Special shipping instructions:	None known.

REGULATORY INFORMATION

WHMIS classification:	None / exempt (manufactured article).
HMIS codes:	Health 0, Flammability 0, Reactivity 0, PPE A
IATA/ICAO Shipping Name:	Not regulated.
TDG shipping name:	Not regulated.

PREPARATION INFORMATION / CONTACTS

Prepared by:	Hilti, Inc., Tulsa, OK USA	Date of Preparation: August 26,2009	**Emergency phone number:**	1 800 424 9300
Customer Service:	Hilti (Canada) Corporation, Mississauga, Ontario; 1 800 363 4458			
Health / Safety contacts:	Hilti, Inc., Tulsa, OK USA; 1 800 879 6000, Jerry Metcalf (x1003704)			
Abbreviations used:	**N/E** = None Established. **N/A** = Not Applicable. **N/Av** = Not Available. **H** = Hours. **HMIS**: Hazardous Materials Identification System			

The information and recommendations contained herein are based upon data believed to be correct; however, no guarantee or warranty of any kind expressed or implied is made with respect to the information provided.

Hilti Firestop
Saving lives through innovation and education

Hilti. Outperform. Outlast.

Certificate of Compliance

Certificate Number **20060214-R13240F**
Report Reference **2006 February 14**
Issue Date **2006 February 14**

Underwriters Laboratories Inc.®

Issued to: Hilti, Inc.
5400 S 122ND East Ave
Tulsa, OK 74146 USA

This is to certify that representative samples of Fill, Void or Cavity Materials
FS 657, CP 658T

Have been investigated by Underwriters Laboratories Inc.® in accordance with the Standard(s) indicated on this Certificate.

Standard(s) for Safety: ANSI/UL 1479, CAN/ULC-S115-05

Additional Information: FS 657 Fire Block for use in Through-Penetration Firestop Systems and CP 658T Firestop Plug for use in Through-Penetration Firestop Systems as currently described in the UL Fire Resistance Directory.

Only those products bearing the UL Classification Mark should be considered as being covered by UL's Classification and Follow-Up Service.

The UL Classification Mark includes: UL in a circle symbol: with the word "CLASSIFIED" (as shown); a control number (may be alphanumeric) assigned by UL; a statement to indicate the extent of UL's evaluation of the product; and, the product category name (product identity) as indicated in the appropriate UL Directory.

Look for the UL Classification Mark on the product

Issued by:
Mona Couloute
Mona Couloute
Underwriters Laboratories Inc.

Reviewed by:
Christopher Johnson
Underwriters Laboratories Inc.