Classified by
Underwriters Laboratories, Inc.
to ASTM E2307

System No. CW-D-2026

F Rating — 2 Hr
T Rating — 1/4 Hr
Integrity Rating — 2 Hr
Insulation Rating — 1/4 Hr
Linear Opening Width — 8 In. Max
Class II Movement Capabilities — 5% Vertical Shear (See Item 3)

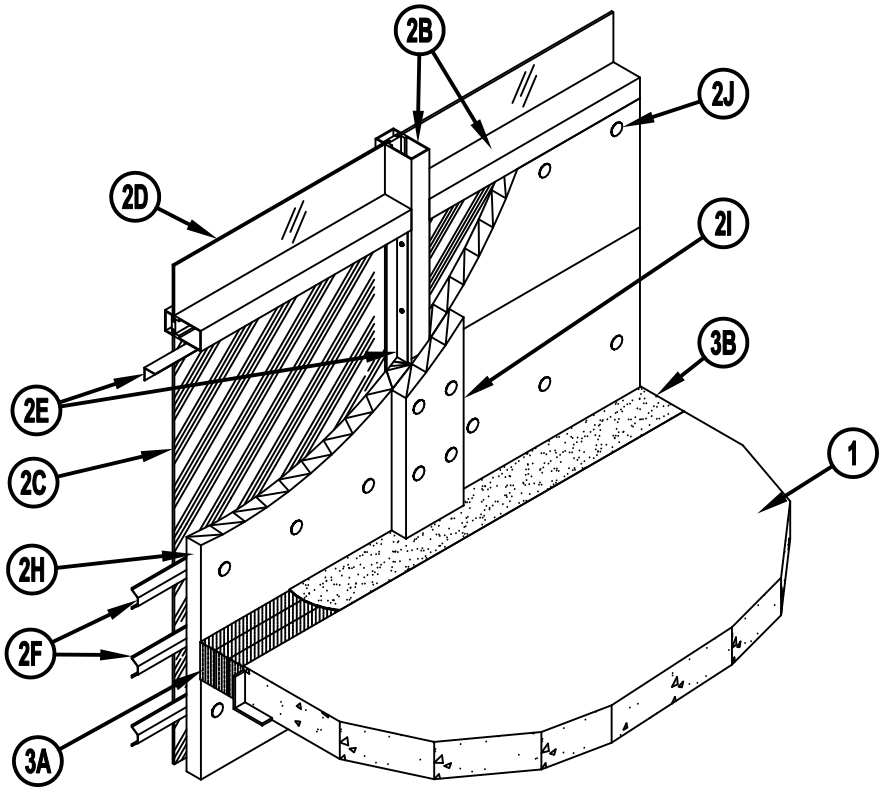

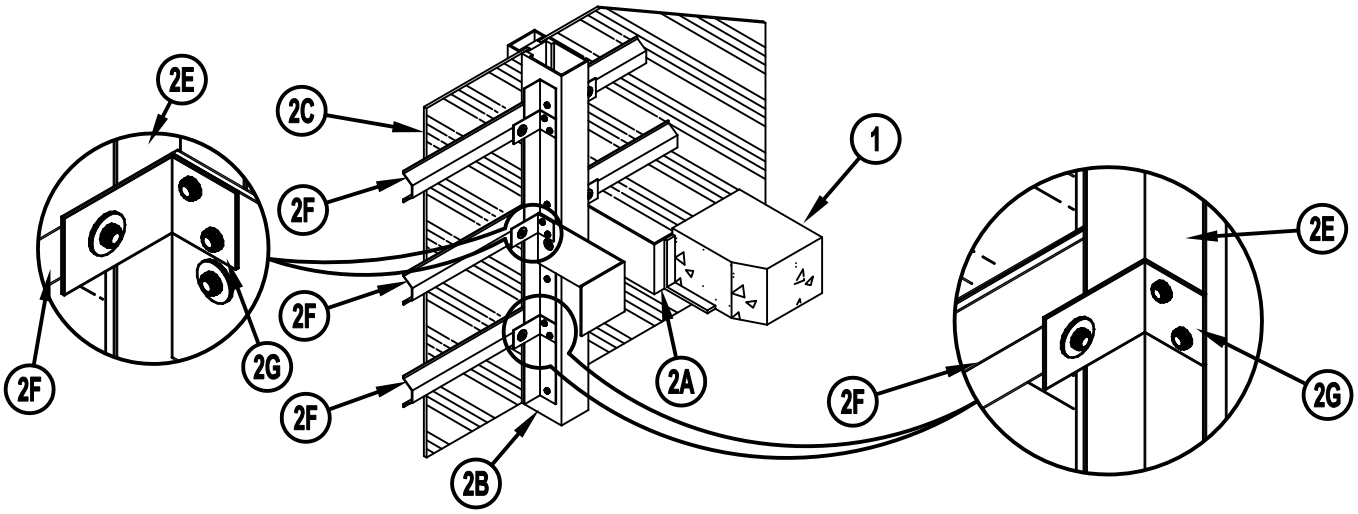

Hilti Firestop Systems

Reproduced by HILTI, Inc. Courtesy of
Underwriters Laboratories, Inc.
April 22, 2011

Classified by
Underwriters Laboratories, Inc.
to ASTM E2307

System No. CW-D-2026

F Rating — 2 Hr
T Rating — 1/4 Hr
Integrity Rating — 2 Hr
Insulation Rating — 1/4 Hr
Linear Opening Width — 8 In. Max
Class II Movement Capabilities — 5% Vertical Shear (See Item 3)

1. Floor Assembly — Min 4-3/4 in. thick reinforced lightweight or normal weight (100-150 pcf) structural concrete. Perimeter of floor assembly to be provided with min 4 by 4 by 1/4 in. thick cast-in-place structural steel angle for weld-attachment of mullion mounting clips (Item 2A).
2. Curtain Wall Assembly — The curtain wall assembly shall incorporate the following construction features:
   A. Mullion Mounting Clips — Min 4 in. long angles with one nom 4 in. leg for attachment to edge of floor assembly and with one leg approx 4 in. longer than distance to nearest face of mullion. Clips welded to steel angle at edge of floor assembly (Item 1) on each side of vertical mullion (Item 2B) at each floor level. Each clip to be provided with elongated holes to accommodate designed amount of movement. Top edge of each mounting angle to be recessed min 3/4 in. below top surface of floor.
   B. Framing — The rectangular tubing mullions (vertical members) and transoms (horizontal members) shall be min 2-1/2 in. wide by 5 in. deep and shall be formed from min 0.100 in. thick aluminum. Mullions spaced max 60 in. OC and secured to mullion mounting clips (Item 2A) at each floor level with two 1/2 in. diam by 4 in. long hex head steel bolts in conjunction with steel nuts and washers. Interior face of mullions to be max 8 in. from edge of floor assembly. Transoms framing top and bottom edges of spandrel panels (Item 2C) to be spaced min 72 in. OC. Transom forming sill of vision panel (Item 2D) to be located such that its bottom surface is at height of 33 in. above the top surface of the floor (Item 1).
   C. Spandrel Panels — Nom ¼ in. thick opaque heat-strengthened glass, nom 1/8 in. thick aluminum panels with 1/4 in. thick edges or nom 1-3/16 in. thick polished granite spandrel panels with 1 in. thick gauged edges. Each panel secured in position with aluminum pressure plates in conjunction with gaskets and steel screws.
   D. Vision Panels — Nom 1/4 in. thick transparent heat-strengthened glass. Each panel secured in position with aluminum pressure plates in conjunction with glazing gaskets and steel screws.
   E. Spandrel Panel Perimeter Angles — Nom 1-1/2 by 1-1/2 in. No. 22 gauge galvanized steel angles installed around entire perimeter of each spandrel panel. Angles recessed from interior face of framing as necessary to accommodate thickness of curtain wall insulation (Item 2H). Angles notched as necessary to be continuous over mullion mounting clips (Item 2A). Angles screw-attached to mullions and transom along sides and top of each spandrel panel with No. 10 by 1/2 in. long self-drilling, self-tapping steel screws spaced max 12 in. OC. Angle along bottom of each spandrel panel to be screw-attached to leg of angle on mullion at each end without any direct attachment to transom.
   F. Stiff Back Channel — Nom 2-1/2 in. wide by 7/8 in. deep hat-shaped channel formed of 22 gauge galv steel to be installed to stiffen curtain wall insulation between mullions above, below and at elevation of safing joint. One stiff back channel to be located with its centerline approx 6 in. below floor and one stiff back channel to be located with its centerline approx 6 in. above floor. A third stiff back channel is to be located near the midheight of the safing joint. A clearance of 1/4 to 1/2 in. shall be maintained between the ends of the stiff back channels and the mullions. Stiff back channel secured to mullion at each end with channel attachment clip (Item 2G) in conjunction with a No. 8 by 1/2 in. long self-drilling, self-tapping wafer head steel screw or a 3/16 in. diam steel bolt with nut and washer.
   G. Channel Attachment Clips — Nom 1-1/2 by 2-1/2 by 1-1/2 in. long angle formed of 16 gauge galv steel. The 2-1/2 in. leg is provided with a 1/4 in. wide by 1-1/2 in. long slot along its centerline for attachment of the stiff back channel. Clips secured to mullions mounting clips (Item 2A) and mullions, through perimeter angles, with two No. 10 by 1/2 in. long self-drilling, self-tapping steel screws. Channel attachment clips attached to mullion mounting clips to be provided with elongated holes to accommodate designed amount of movement. Channel clips installed with 2-1/2 in. leg recessed from interior face of mullion to accommodate thickness of curtain wall insulation (Item 2H).
   H. Curtain Wall Insulation* — Min 2 in. thick mineral wool board insulation, unfaced or faced on one side with aluminum foil/scrim vapor retarder, supplied in min 36 in. wide boards. Insulation boards to be installed with no vertical seams. A full-width board shall be centered at the midheight of floor and tightly fitted between vertical mullions, flush with interior surface of framing. The centered board shall be secured to the stiff back channels (Item 2F) located approx 6 in. above and below the floor with cup head weld pins (Item 2J) spaced max 10 in. OC along each channel. The remainder of the spandrel panel framing above and below the centered full-width board shall be filled in with additional lengths of board cut to fit tightly between mullions and with the horizontal seams between boards sections tightly butted. The boards shall be secured to the spandrel panel perimeter angles with cup head weld pins at each corner of each board and spaced max 10 in. OC. When faced boards are used, butted seams to be covered with min 4 in. wide aluminum foil tape.
   ROCKWOOL MALAYSIA SDN BHD — CurtainRock 80
   ROXUL INC — CurtainRock 80

Classified by
Underwriters Laboratories, Inc.
to ASTM E2307

System No. CW-D-2026

F Rating — 2 Hr
T Rating — 1/4 Hr
Integrity Rating — 2 Hr
Insulation Rating — 1/4 Hr
Linear Opening Width — 8 In. Max
Class II Movement Capabilities — 5% Vertical Shear (See Item 3)

I. Framing Covers - Curtain Wall Insulation* — Min 8 in. wide strips cut from the same min 2 in. thick mineral wool batt insulation used for the curtain wall insulation (Item 2H). Framing covers to be centered over mullions, and secured to the spandrel panel perimeter angles (Item 2E) with cup head weld pins (Item 2J) spaced max 12 in. OC. Where more than one spandrel panel occurs between vertically separated vision panels, the horizontal transom between spandrel panels shall also be covered with an 8 in. wide framing cover in the same manner as on the vertical mullions. Framing covers on mullions to abut the mineral wool batt safing material (Item 3A) above and below floor.
ROCKWOOL MALAYSIA SDN BHD — CurtainRock 80
ROXUL INC — CurtainRock 80

J. Weld Pin — No. 12 gauge galv steel weld pin with nom 1-3/16 in. diam galv steel cup head. Cup head weld pins provided in two lengths. One length to be equal to thickness of curtain wall insulation (Item 2H) and second length to be equal to thickness of curtain wall insulation plus thickness of framing cover (Item 2I). Cup head weld pins inserted through curtain wall insulation and mullion covers and welded to spandrel panel perimeter angles at max OC spacings referenced in Items 2H and 2I.

3. Safing System — Max separation between edge of floor assembly and face of framing member at time of installation is 8 in. The safing system is designed to accommodate vertical shear up to 5% of its installed width. - The safing system shall incorporate the following construction features:

A. Forming Material* — Nom 4 in. thick, mineral wool batt safing material to be installed in continuous pieces between mullion clips. Safing material to be cut to a min 4-1/2 in. width and stacked to a thickness which is at least 25 percent greater than the width of the linear gap between the curtain wall and the edge of the concrete floor slab. The safing material is compressed and inserted cut-edge-first into the linear gap such that its top surface is recessed 1/4 in. from the top-surfaces of the floor assembly and such that it is friction-fit between mullion mounting angles. Additional pieces of safing material to be friction-fit into space between mullion mounting clips at each mullion location with top edges of mullion clips covered with a min 1/4 in. thickness of compressed safing material.
ROCKWOOL MALAYSIA SDN BHD — SAFE
ROXUL INC — SAFE

B. Fill, Void or Cavity Material* — Min 1/4 in. thickness of fill material applied over top of forming material, flush with the top surface of the floor assembly.
HILTI CONSTRUCTION CHEMICALS, DIV OF HILTI INC — CP 604 Self-Leveling Firestop Sealant

*Bearing the UL Classification Mark