Height Extension

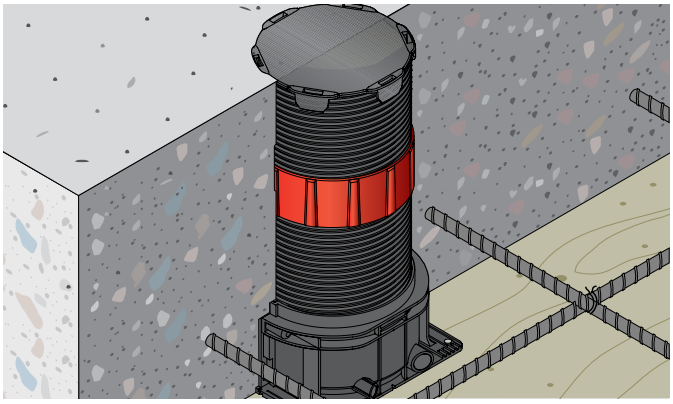

Product description

- For use when concrete slabs are greater than 8" thick
- Device may add up to 6" with each extension kit
- QuickTurn Connection system promotes a fast, positive connection to the top of the appropriate cast-in device
- Red (CP 680-P) and Black (CP 680-M) versions create for easier identification when both combustible and non-combustible penetrants are employed for the same project

Color

- CP 680-P Kit — Red cylinder with Red coupling band
- CP 680-M Kit — Black cylinder with Red coupling band

Installation Instructions

Notice

- Before handling, read Material Safety Data Sheet and product label for safe usage and health information.
- Instructions below are general guidelines — always refer to the applicable drawing in the UL Fire Resistance Directory or Hilti Firestop Systems Guide for complete installation information

Metal Deck Adapters

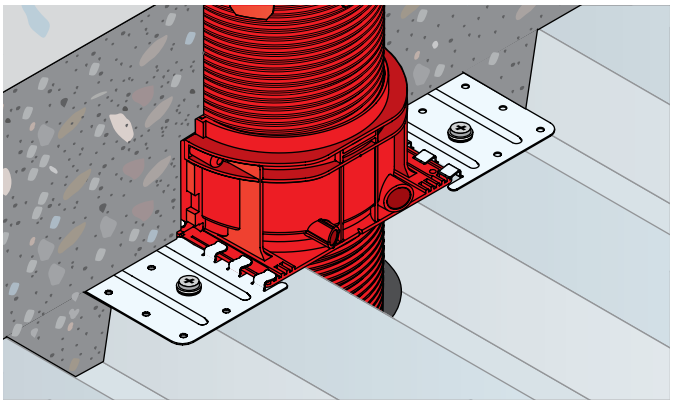

Product description

- For use with concrete over metal deck applications
- 6" cylinder extension protrudes through even the thickest spray fireproofing
- QuickTurn Connection system promotes a fast, positive connection to the underside of the appropriate cast-in device
- Red (CP 680-P) and Black (CP 680-M) versions create for easier identification when both combustible and non-combustible penetrants are employed for the same project
- Opening required to place the cylinder through a metal deck
  For 2" Devices — 3-1/2" diameter
  For 3" Devices — 4-1/2" diameter
  For 4" Devices — 5-1/2" diameter
  For 6" Devices — 7-1/4" diameter

Color

- CP 680-P Kit — Red cylinder with two (2) metal plates
- CP 680-M Kit — Black cylinder with two (2) metal plates

Installation instructions

Notice

- Before handling, read Material Safety Data Sheet and product label for safe usage and health information.
- Instructions below are general guidelines — always refer to the applicable drawing in the UL Fire Resistance Directory or Hilti Firestop Systems Guide for complete installation information

Hilti Firestop
Saving lives through innovation and education

Hilti. Outperform. Outlast.